A STUDY OF UPGRADABILITY USING DIGITAL COHERENT TECHNOLOGY ON EXTING SUBMARINE TRANSMISSION SYSTEMS

Hiroshi Nakamoto[1)], Shoichiro Oda[2)], Toshiki Tanaka[2)], Hiroyuki Irie[1)], Takeshi Hoshida[2)], Jens C. Rasmussen[2)], Akira Sugiyama[1)], Izumi Yokota[1)]

Email: <nakamoto.hr@jp.fujitsu.com>

1) Fujitsu Limited, 2) Fujitsu Laboratories Ltd,
1-1 Kamikodanaka 4-chome, Nakahara-ku, Kawasaki 211-8588, Japan

Abstract:
We demonstrated that a guard band was necessary to minimize the degradation of 100G signal due to the influence received from 10G OOK when 100G signals and 10G signals coexist during upgrade phase. Using the NZ-DSF transmission experiment, its effectiveness was confirmed for a 3395-km transmission. We found the total capacity of a system can be enlarged by using DP-QPSK because of its excellent spectral efficiency even if it needs a guard band.

1. INTRODUCTION

In the submarine transmission system, the demand for the system capacity expansion has increased rapidly and also the demand of increasing transmission rate on per wavelength to more than 10G, such as 40G/100G, has increased as well.

The high spectral efficiency technology is required for the capacity expansion and a low transmission rate is required to suppress a signal degrading caused by non-linearity effect. A digital coherent technology has an excellent consistency with polarization multiplexing and the phase-modulation format simultaneously that can meet the above-mentioned demand and can improve the receiver sensitivity in addition [1] [2].

Increasing capacity by the 100G application is effective for existing NZ-DSF submarine transmission system, we investigated the transmission characteristics of 112Gbit/s Dual – polarization (DP)-RZ-quadrature phase sift keying (QPSK) in an existing fiber.

Moreover, the spectral efficiency of digital coherent 100G can enlarge a capacity by adjusting 10G to 100G because the digital coherent 100G is more efficient than existing RZ-on off keying (OOK). In this case, the signal degradation by XPM from the OOK signal was caused as well as upgrade by 10G RZ-DPSK ［3］, We investigated guard band in order to decrease this influence.

2. 112GBIT/S/CH NZ-DSF TRANSMISSION

Figure 1 shows the experiment configuration. The light source at 100GHz intervals from 1541.35 to 1556.66 nm is multiplexed and one of the light sources in the same frequency range is also multiplexed with 112Gbit/s symbol-interleaved DP-RZ-QPSK modulation. Then the latter is assumed to be the measured channel.

In a transmitting part, after reducing correlation between channels by De-correlation circuit [4], the signals are compensated by the chromatic dispersion and forwarded to a transmission line.

The transmission line consists of 10 EDFAs, 7 NZ-DSF sections, GEQ section,

Copyright © 2010 SubOptic

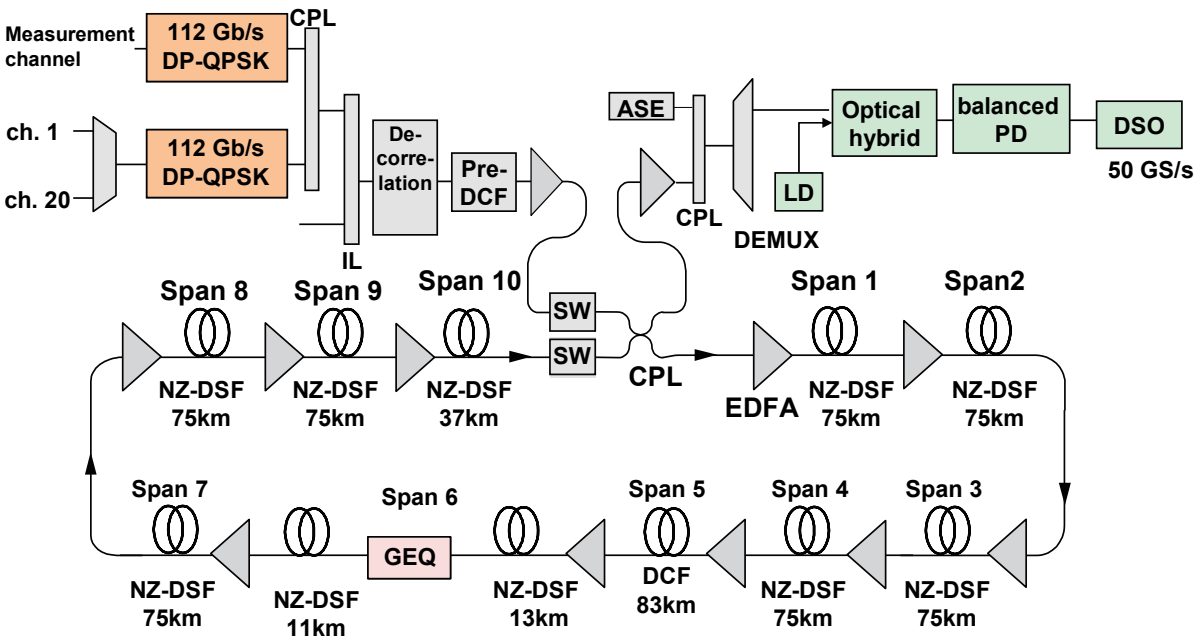

DCF : Dispersion compensating fibers
IL : Interleaver
SW : Switch
CPL : Coupler
GEG : Gain equalizer
DSO : Digital storage oscilloscope

Fig.1 112Gbit/s/ch transmission experimental setup

DCF section, and SW section and its loop length is 679 km. The chromatic dispersion and dispersion slope of NZ-DSF are -2.78 ps/nm/km and 0.068 ps/nm2/km. The input power to each fiber span was set at -3dBm/ch.

At receiver side, the intradyne detection with polarization diversity is performed. The real number part and imaginary number part of both polarizations are quantized by the digital storage oscilloscope (DSO). The data is re-sampled to 50 GS/s and de-multiplexing, frequency offset compensation, carrier recovery and BER estimation are performed [5]. It should be noted that the nonlinear compensation is not considered this time.

Figure 2 shows the Q value measured after 3395 km transmission (5 times of the loop length). The post- and pre-chromatic dispersion are optimized. As a result, the obtained Q value of all channels is 8.5dB or more.

It corresponds to the transmission of 2Tbit/s through 3395km since the number of the wavelength is 20 waves.

Around the zero chromatic dispersion area, the Q factor degrades significantly and it can be considered that it comes from the influence by XPM between the signals and the Gordon-Mollenauer phase noise.

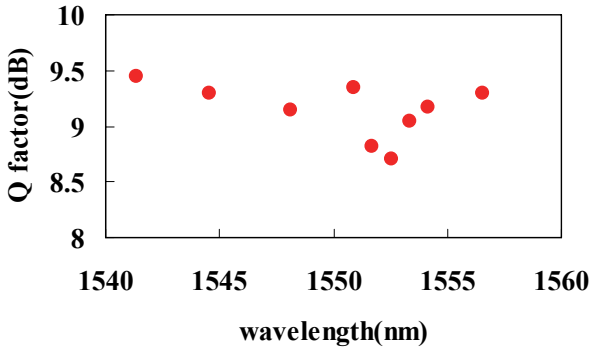

Fig.2 Q factor after 3395-km transmission

3. 100G UPGRADE WITH NZ-DSF SYSTEM

Following to the above, we investigate the characteristic when the 10Git/s RZ-OOK NZ-DSF transmission system is upgraded by the 100Gbit/s signal.
Figure 4 shows the transmitter side configuration.

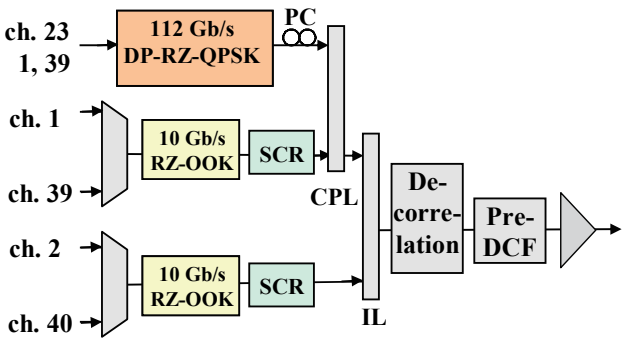

PC : Polarization controller
SCR : Polarization scrambler
IL : Interleaver
CPL : Coupler
DCF : Dispersion compensating fiber

Fig.3 Configuration of transmitter of upgrade experiment

The light source of the 50GHz interval from 1541.35 to 1556.66 nm is configured, and the odd channels are multiplexed and modulated with 10.7 Gbit/s RZ-OOK format. Then, it is multiplexed with 112Gbit/s DP-RZ-QPSK signal after gone through the polarization scrambler.

The even channels are also multiplexed in the same manner, and multiplexed with the odd channels. Then, de correlation and dispersion compensation are performed and the signal is forwarded to the transmission channel. The input power of 10.7 Gbit/s RZ-OOK signal to each fiber span was set at -4dBm/ch in consideration of the conventional design. The power of DP-RZ-QPSK was set at -3 dBm as well as FIG 1.

The configurations of the transmission line and receiver side are the same as Fig. 1.

The measured channels are 3 wavelengths (1541.35, 1552.52, and 1556.56 nm) taking account of the shortest wave, a zero-dispersion wavelength and the longest wave length of the band. The guard band is defined as the space from the 112Gbit/s optical signal to the nearest RZ-OOK. In order to set the guard band, the RZ-OOK signal in the band was extinguished. For the adjustment of the gain slope caused by the change of the repeater output power, the gain profile is equalised by adjusting Gain equalizer GEQ.

Figure 5 shows the relation of the Q factor and guard band. As a result of this experiment, 8.5dB is obtained by the guard bands with the signal of the short wavelength (300GHz) and the long wavelength (500GHz). However, only 8.0dB is obtained with the guard band of 500GHz in the central wavelength.

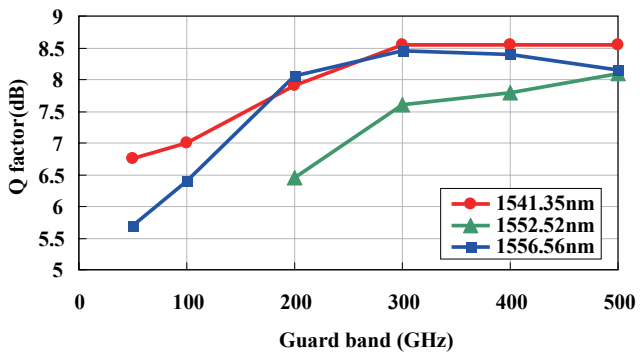

Fig.4 Relationship of guard band and Q factor

The relation between the guard band and penalty are shown in Fig. 6, reflecting the result of the experiment and simulation result of 3 wavelengths. The values of Guard band are almost same in both results to eliminate the penalty by the influence of OOK. Accordingly, the guard band can be obtained by the calculation basis.

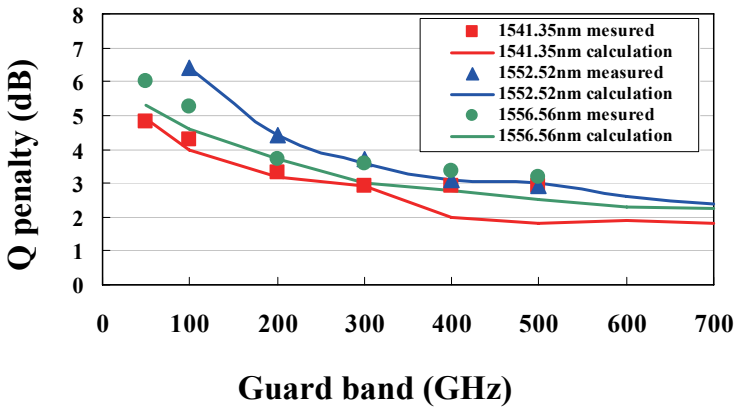

Fig.5 Relationship of guard band and penalty

4. SUMMARY

We show 112Gbit/s DP-RZ-QPSK 3395km transmission is feasible in an existing NZ-DSF fiber. Moreover, the influence of Guard band is necessary to minimize the degradation of 100G signal due to the influence received from 10G OOK when 100G signals and 10G signals coexist during upgrade phase, and the influence of guard band was quantitatively evaluated.

The upgrade technique with this guard band design was applied to the NZ-DSF transmission system, and the effectiveness was confirmed for 3395-km transmission.

REFERENCE

[1] M.Salsi et al., “155x100Gbit/s coherent PDM-QPSK transmission over 7,200km" ECOC 2009 PD2.5

[2] E.Yamazaki et al., “Multi-stage nonlinear compensation in coherent receiver for 12012km WDM transmission of 10-ch x 111Gbit/s no-guard-interval co-OFDM" Electronics Letters 18th June 2009 Vol.45 No.13, pp.696-697,2009

[3] H.Nakamoto et al., “A Study of Upgradeability Using the RZ-DPSK Format on Existing WDM Transmission System" SubOptic 2007, ThB1.5

[4] Z.Tao et al., “The Impact of DWDM Channel De-correlation Method in Optical PSK Coherent Transmission Experiment" ECOC 2009 Pager 9.4.2

[5] S.Oda et al., "112 Gb/s DP-QPSK Transmission Using a Novel Nonlinear Compensation in Digital Coherent Receiver” OFC 2009, OthR6

Copyright © 2010 SubOptic